BLACK BOX
NETWORK SERVICES

# *Dynamic Fiber Conversion System*
# *2-Module Power Chassis*

# User Manual

1000 Park Drive · Lawrence, PA 15055-1018
724-746-5500 · Fax 724-746-0746

040-L3014-001A 11/03

## TRADEMARKS

All applied-for and registered trademarks are the property of their respective owners.

## FEDERAL COMMUNICATIONS COMMISSION AND CANADIAN DEPARTMENT OF COMMUNICATIONS RADIO FREQUENCY INTERFERENCE STATEMENTS

This equipment generates, uses, and can radiate radio frequency energy and if not installed and used properly, that is, in strict accordance with the manufacturer's instructions, may cause interference to radio communication. It has been tested and found to comply with the limits for a Class A computing device in accordance with the specifications in subpart J of Part 15 of FCC rules, which are designed to provide reasonable protection against such interference when the equipment is operated in a commercial environment. Operation of this equipment in a residential area is likely to be cause interference, in which case the user at his own expense will be required to take whatever measures may be necessary to correct the interference.

Changes or modifications not expressly approved by the party responsible for compliance could void the user's authority to operate the equipment.

This digital apparatus does not exceed the Class A limits for radio noise emission from digital apparatus set out in the Radio Interference Regulation of the Canadian Department of Communications.

Le présent appareil numérique n'émet pas de bruits radioélectriques dépassant les limites applicables aux appareils numéirques de las classe A prescrites dans le Règlement sur le brouillage radioélectrique publié par le ministère des Communications du Canada.

## NORMAS OFICIALES MEXICANAS (NOM)

ELECTRICAL SAFETY STATEMENT

1. Todas las instrucciones de seguridad y operación deberán ser leídas antes de que el aparato eléctrico sea operado.
2. Las instrucciones de seguridad y operación deberán ser guardadas para referencia futura.
3. Todas las advertencias en el aparato eléctrico y en sus instrucciones de operación deben ser respetadas.
4. Todas las instrucciones de operación y uso deben ser seguidas.
5. El aparato eléctrico no deberá ser usado cerca del agua—por ejemplo, cerca de la tina de baño, lavabo, sótano mojado o cerca de una alberca, etc.
6. El aparato eléctrico debe ser usado únicamente con carritos o pedelstales que sean recomendados por el fabricante.
7. El aparato eléctrico debe ser montado a la pared o al techo sólo como sea recomendado por el fabricante.
8. Servicio—El usuario no debe intentar dar servicio al equipo eléctrico más allá a lo descrito en las instrucciones de operación. Todo otro servicio deberá ser referido a personal de servicio calificado.
9. El aparato eléctrico debe ser situado de tal manera que su posición no interfiera su uso. La colocación del aparato eléctrico sobre una cama, sofá, alfombra or superficie similar puede bloquea la ventilación, no se debe colocar en libreros o gabinetes que impidan el flujo de aire por los orificios de ventilación.
10. El equipo eléctrico deber ser situado fuera del alcance de fuentes de calor como radiadores, registros de calor, estufas u ostros aparatos (incluyendo amplificadores) que producen calor.
11. El aparato eléctrico deberá ser connectado a una fuente de poder sólo del tipo descrito en el instructivo de operación, o como se indique en el aparato.
12. Precación debe ser tomada de tal manera que la tierra fisica y la polarización del equipo no sea eliminada.
13. Los cables de la fuente de poder deben ser guiados de tal manera que no sean pisados ni pellizcados por objetos colocados sobre o contra ellos, poniendo particular atención a los contactos y receptáculos donde salen del aparato.
14. El equipo eléctrico debe ser limpiado únicamente de acuerdo a las recomendaciones del fabricante.
15. En caso de existir, una antena externa deberá ser localizada lejos de las lineas de energia.
16. El cable de corriente deberá ser desconectado del cuando el equipo no sea usado por un largo periodo de tiempo.
17. Cuidado debe ser tomado de tal manera que objectos liquidos no sean derramados sobre la cubierta u orificios de ventilación.
18. Servicio por personal calificado deberá ser provisto cuando:
    - A: El cable de poder o el contacto ha sido dañado; u
    - B: Objectos han caído o líquido ha sido derramado dentro del aparato; o
    - C: El aparato ha sido expuesto a la lluvia; o
    - D: El aparato parece no operar normalmente o muestra un cambio en su desempeño; o
    - E: El aparto ha sido tirado o su cubierta ha sido dañada.

**NOTES:**

## 4.0 SPECIFICATIONS

| Model | 2-Slot AC | 2-Slot DC |
|---|---|---|
| Model Number | LMC3014A | LMC3082A |
| Module Capacity | 2 | 2 |
| Power Supply | Fixed/Internal | Fixed/Internal |
| Power Requirements | 110-230VAC, 0.5A/0.4A, 50/60Hz | +/- 48VDC, 1.0A |
| Dimensions | W6.7" x D:5.51" x H:1.87" | W6.7" x D:5.51" x H:1.87" |
| Weight | 2.5 lbs | 2.5 lbs |
| Compliance | UL, CE, FCC Class A,<br>NEBS Level 3 | UL, CE, FCC Class A,<br>NEBS Level 3 |
| Temperature<br>-Operating<br>-Storage | 0 to 45 C<br>-40 to 80 C | 0 to 45 C<br>-40 to 80 C |
| Humidity<br>(non-condensing) | 0 - 90% | 0 - 90% |
| Altitude | 0 - 10,000 ft. | 0 - 10,000 ft. |
| MTBF (hrs) | 350,000 | 400,000 |

## 5.0 CUSTOMER SUPPORT INFORMATION

Order **toll-free** in the U.S.: Call **877-877-BBOX** (outside U.S. call **724-746-5500**)
FREE technical support 24 hours a day, 7 days a week; Call **724-746-5500** or fax **724-746-0746**
Mailing address: **Black Box Corporation**, 1000 Park Drive, Lawrence, PA 15055-1018
Web site: **www.blackbox.com** E-mail: **info@blackbox.com**



# Dynamic Fiber Conversion System
# 2-Module Power Chassis
# User Manual

## 1. 0 GENERAL DESCRIPTION

The Dynamic Fiber Conversion System (DFCS) 2-Module Power Chassis is powered by a single internal universal AC or 48VDC power supply and can accommodate any one or two DFCS media converters. It is ideal for enterprise Local Area Network (LAN) or Metropolitan Area Network (MAN) applications where remote management and explicit demarcation between the service provider's equipment and customer's equipment is required.

**Fig 1. 2-Module chassis**

This User Manual describes the following models:

| DFCS 2-Module Power Chassis Options | | |
|---|---|---|
| Power Configuration | 2-Module AC | 2-Module DC |
| Model | LMC3014A | LMC3082A |

### 1.1 Terms

**Backplane** A printed circuit board which is permanently mounted inside the chassis and is populated with receptacle connectors into which modules are inserted.

**Module** A DFCS plug-in card positioned into a slot location and inserted into a backplane connector.

**Module-Guide** A mechanical channel guiding module insertion into a backplane connector.

**Slot** A single chassis position consisting of a backplane connector and its associated module-guides.

**"A" Link** A backplane slot-to-slot connection that provides Ethernet connectivity between adjacent slots.

**"A" Port** An interface on a module capable of Ethernet traffic via the backplane's "A" Link.

**Note:**

**1.** Some other chassis models also support a **"B" Link**. This feature is not available on the 2-Module Chassis.

2. Some modules support a **"B" Port**. In the application drawings in this manual, the "B" Ports depicted are not connected.

## 1.2 Mechanical Description

The 2-Module chassis consists of a fixed AC (model LMC3014A) or DC (model LMC3082A) power supply that provides power to the chassis' two (2) backplane connectors.

## 1.3 Backplane Architecture

The chassis features two (2) module slots numbered 1 (top slot) and 2 (bottom slot). As modules are inserted into the chassis slots, they are seated into the slot connectors.

The two slots are connected using the "A" Link which provides Ethernet connectivity between the two slots.

When modules with "A" Port capability are inserted into the adjacent chassis slots, they can connect their Ethernet data using their "A" Ports and the "A" Link.

**Note that not all modules support and have backplane ports. To find out about each specific module's backplane port configuration, refer to the specific module's documentation.**

This chassis architecture facilitates a variety of applications including unmanaged, out-of-band managed, in-band managed and multi-port configurations.

Fig 2. depicts the chassis' backplane architecture.

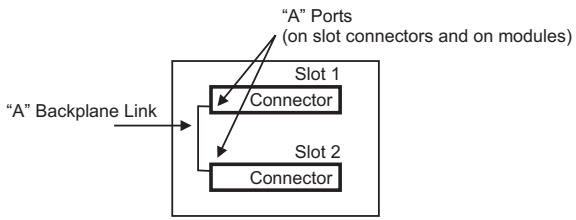


**Fig 2. 2-Module Backplane Architecture**

## 1.4 Application Examples

### 1.4.1 In-Band Managed 10/100 Converter Application

Fig 3. depicts a typical in-band managed fiber to UTP conversion at a Customer's Premises (CP) or at a remote network edge. In-band management is a desirable feature in these applications since it facilitates remote monitoring, configuration and trap notification from the converter chassis.



- ☐ The operating temperature of this equipment is 0 to 45 degrees C. If installed in a closed or multi-module rack assembly, the operating ambient temperature of the rack must not exceed the maximum rated 45 degrees C.
- ☐ Installation of the equipment should be such that the air flow in the front and back of the module is not compromised or restricted.
- ☐ Never use this equipment to carry any weight except its own. Never use it as a shelf to support weight of other equipment.

## 3.4 DC Powered Chassis Mounting

- ☐ Ensure that the 48VDC circuit breaker can supply 1.0 Amp of current.
- ☐ Locate the 48VDC circuit breaker, and switch the 48VDC circuit breaker to the OFF position.
- ☐ Prepare a power cable using a three conductor insulated wire (not supplied) with a 14 AWG gauge minimum. Cut the power cable to the length required.
- ☐ Strip approximately 3/8 of an inch of insulation from the power cable wires.
- ☐ Connect the power cables to the DFCS Chassis by fastening the stripped ends to the 48VDC connector.

  **WARNING:** Note the wire colors used in making the positive, negative and ground connections. Use the same color assignment for the connection at the circuit breaker.
- ☐ Connect the power wires to the circuit breaker and switch the circuit breaker ON. If any modules are installed, their Power LED should indicate the presence of power.

**Fig 7. Rear of 2-Module chassis with 48VDC power connector**

**WARNING!!!**

**NEVER ATTEMPT TO OPEN THE CHASSIS OR SERVICE THE POWER SUPPLY OR FAN MODULE. OPENING THE CHASSIS MAY CAUSE SERIOUS INJURY OR DEATH.**
**THERE ARE NO USER REPLACEABLE OR SERVICEABLE PARTS IN THIS UNIT.**

**Fig 6. Rear of 2-Module chassis with power cord**

## 3.3 DC Powered Chassis Site Preparation

- ☐ Power source should be available within 5 ft. of the chassis. The over current protection for connection with centralized DC shall be provided in the building installation, and shall be a UL listed circuit breaker rated 20A, and installed per the National Electrical Code, ANSI/NFPA-70.
- ☐ This equipment requires 48VDC/1.0 Amps rated power. Appropriate overloading protection should be provided on the DC power source outlets utilized.

**WARNING:** Only a DC power source that complies with safety extra low voltage (SELV) requirements can be connected to the DC-input power supply.

**WARNING REGARDING EARTHING GROUND:**

- This equipment shall be connected to the DC supply system earthing electrode conductor or to a bonding jumper from an earthing terminal bar or bus to which the DC supply system earthing electrode is connected.
- This equipment shall be located in the same immediate area (such as adjacent cabinets) as any other equipment that has a connection between the earthed conductor of the same DC supply circuit and the earthing conductor, and also the point of earthing of the DC system. The DC system shall not be earthed elsewhere.
- The DC supply source is to be located within the same premises as this equipment.
- There shall be no switching or disconnecting devices in the earthed circuit conductor between the DC source and the earthing electrode conductor.



This application uses a 10/100 module for media conversion and a SNMP and Telnet Management Module (MGT) for management. Both modules are plugged into the 2-Module chassis.

The 10/100 converter module is designed as a 4-port-switch and features two front-plane Ethernet ports (100Base-Fx fiber and 10/100Base-Tx UTP) and two 10/100Mbps Ethernet backplane ports (“A” and “B” Ports).

The MGT features a 10Mbps Ethernet backplane “A” Port.

The user data flows between the fiber and UTP ports of the 10/100 module.

The management data flows between the MGT and the 10/100 module via the “A” Link. Once connected into the data stream of the 10/100 module, the management data can flow via the fiber or UTP ports where it shares the medium with the user data (in-band).

This configuration provides the network administrator with the ability to manage and maintain the converter chassis at the remote location.

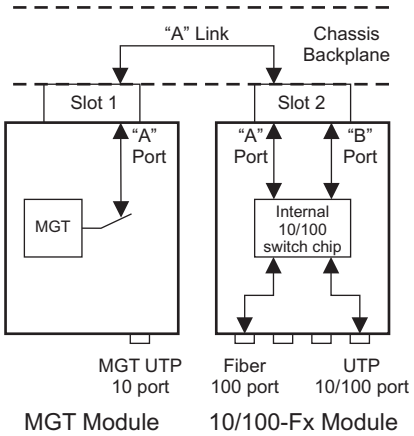


**Fig 3. In-Band Managed 10/100 Converter Application**

## 1.4.2 Managed 4-Port Switch Application

Fig 4. depicts a typical managed switch application.

This application uses a 4-port 10/100 switch module and a SNMP and Telnet Management Module (MGT) for management. Both modules are plugged into the 2-Module chassis.

The 10/100 switch module is designed as a 6-port-switch and features four front-plane 10/100Base-Tx UTP Ethernet ports and two 10/100Mbps Ethernet backplane ports (“A” and “B” Ports).

The MGT features a 10Mbps Ethernet backplane “A” Port.

The user data flows between the UTP ports of the 10/100 switch module.

The management data flows between the MGT and the 4-port switch module via the “A” Link. Once connected into the data stream of the switch module, the management data can flow via any of the four 10/100 switch ports where it shares the medium with the user data (in-band).

This configuration provides the network administrator with the ability to efficiently and cost effectively manage a small (4-port) workgroup switch.

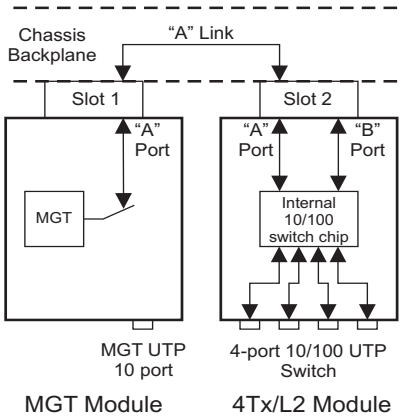


**Fig 4. Managed 4-Port Switch Application**

## 1.4.3 Unmanaged 5-Port Switch with a Fiber Uplink Application

Fig 5. depicts a typical unmanaged 10/100 switch with a fiber uplink application.

This application uses a 4-port 10/100 switch module and a 10/100 fiber converter module. Both modules are plugged into the 2-Module chassis.

The 10/100 switch module is designed as a 6-port-switch and features four front-plane 10/100Base-Tx UTP Ethernet ports and two 10/100Mbps Ethernet backplane ports ("A" and "B" Ports).

The 10/100 converter module is designed as a 4-port-switch and features two front-plane Ethernet ports (100 fiber and 10/100 UTP) and two 10/100 Ethernet backplane ports ("A" and "B" Ports).

The 10/100 switch and the 10/100 converter modules are connected via the "A" Backplane Link.

The user data flows between the 10/100 ports of the 4-port switch module and the fiber and UTP ports of the 10/100 converter module via the "A" Link, combining the two modules into a 5-port 10/100 switch with a fiber uplink.

This configuration provides the network administrator with an efficient and cost effective unmanaged small (5-port) workgroup switch that can be easily configured to match the user's fiber type (multimode or single-mode), connector type (SC, ST, LC, MT-RJ) or distance requirements.



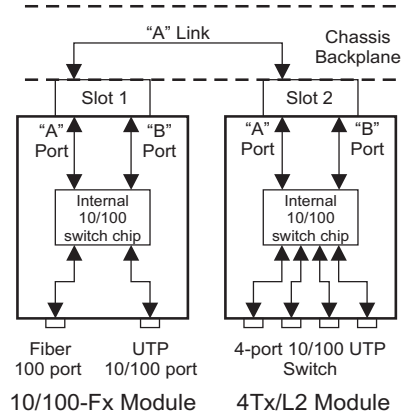


**Fig 5. Unmanaged 5-Port 10/100 Switch with a Fiber Uplink Application**

## 2.0 UNPACKING, VISUAL INSPECTION AND INVENTORY

Review contents. The following items should be included:

- ☐ DFCS 2-Module Power Chassis
- ☐ One AC power cord (AC MODULES ONLY)
- ☐ One DC power connector (DC MODULES ONLY)
- ☐ User Manual

Inspect equipment and immediately report any damage or discrepancies to Black Box at 724-746-5500. If equipment is damaged, do not apply power to the module.

## 3.0 SITE PREPARATION AND INSTALLATION

### 3.1 AC Powered Chassis Site Preparation

- ☐ Power source should be available within 5 ft. of the chassis and installed per the National Electrical Code ANSI/NFPA-70.
- ☐ This equipment requires a 110-230VAC, 0.5A/0.4A, 50/60Hz power outlet. Appropriate overloading protection should be provided on the AC power source outlets utilized.
- ☐ The operating temperature of this equipment is 0 to 45 degrees C. If installed in a closed or multi-module rack assembly, the operating ambient temperature of the rack must not exceed the maximum rated 45 degrees C.
- ☐ Installation of the equipment should be such that the air flow in the front and back of the module is not compromised or restricted.
- ☐ Never use this equipment to carry any weight except its own. Never use it as a shelf to support the weight of other equipment.

### 3.2 AC Powered Chassis Mounting

- ☐ Attach the AC power cords to the back of the Power Receptacle and plug into the AC outlet. Any installed DFCS modules will illuminate the power LED.